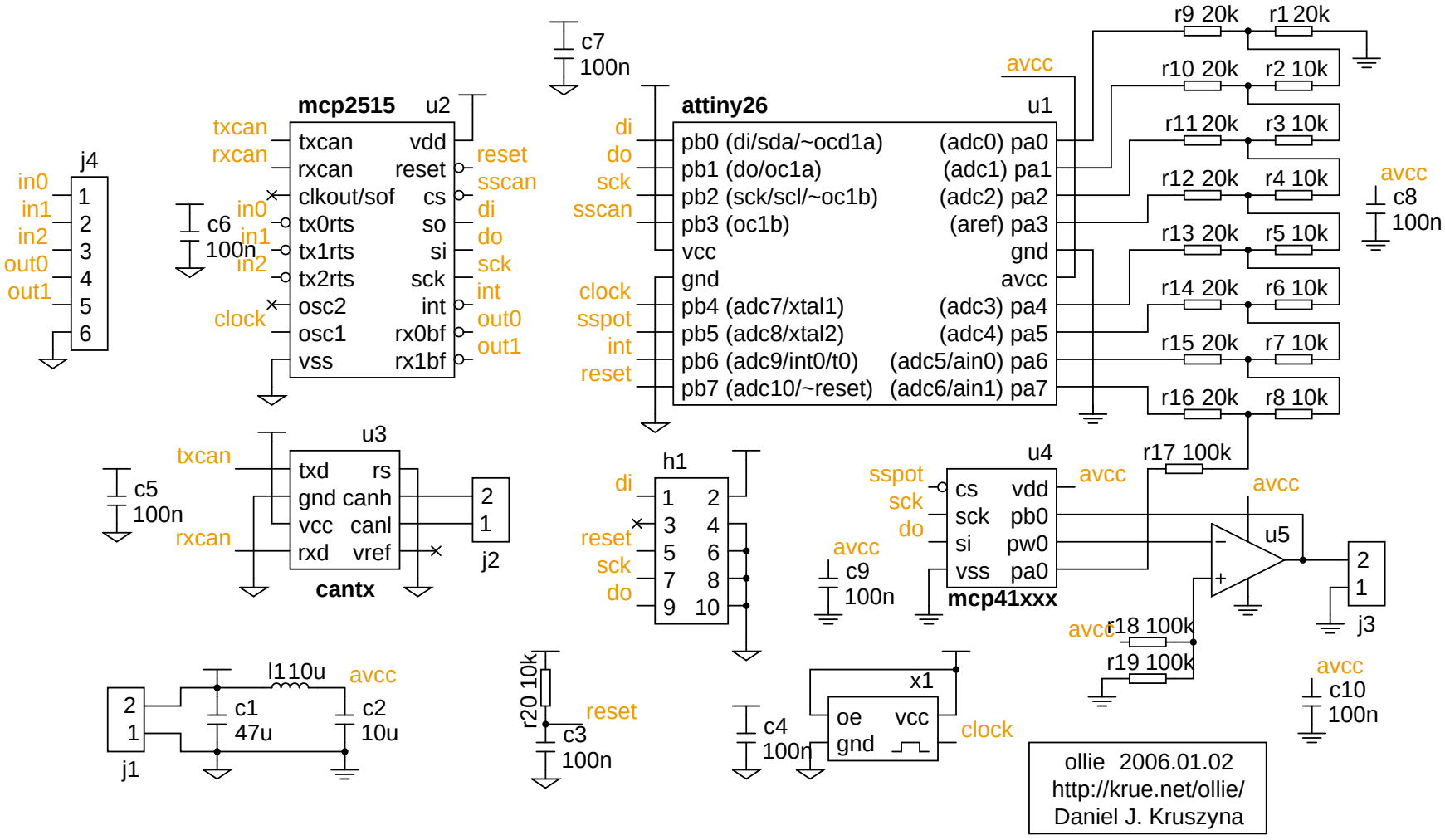
mcp2515
u2
txcan
rxcan
clkout/sof
tx0rts
tx1rts
tx2rts
osc2
osc1
vss
vdd
reset
cs
so
si
sck
int
rx0bf
rx1bf
attiny26
u1
pb0 (di/sda/~ocd1a)
pb1 (do/oc1a)
pb2 (sck/scl/~oc1b)
pb3 (oc1b)
vcc
gnd
pb4 (adc7/xtal1)
pb5 (adc8/xtal2)
pb6 (adc9/int0/t0)
pb7 (adc10/~reset)
(adc0) pa0
(adc1) pa1
(adc2) pa2
(aref) pa3
gnd
avcc
(adc3) pa4
(adc4) pa5
(adc5/ain0) pa6
(adc6/ain1) pa7
j4
in0
in1
in2
out0
out1
c6
100n
c7
100n
c8
100n
c5
100n
u3
txd
gnd
vcc
rxd
rs
canh
canl
vref
cantx
j2
h1
di
reset
sck
do
u4
cs
sck
si
vss
vdd
pb0
pw0
pa0
mcp41xxx
sspot
c9
100n
u5
j3
r9 20k
r1 20k
r10 20k
r2 10k
r11 20k
r3 10k
r12 20k
r4 10k
r13 20k
r5 10k
r14 20k
r6 10k
r15 20k
r7 10k
r16 20k
r8 10k
r17 100k
r18 100k
r19 100k
c10
100n
j1
l1 10u
c1
47u
c2
10u
r20 10k
c3
100n
c4
100n
x1
oe
gnd
vcc
clock
ollie 2006.01.02
http://krue.net/ollie/
Daniel J. Kruszyna