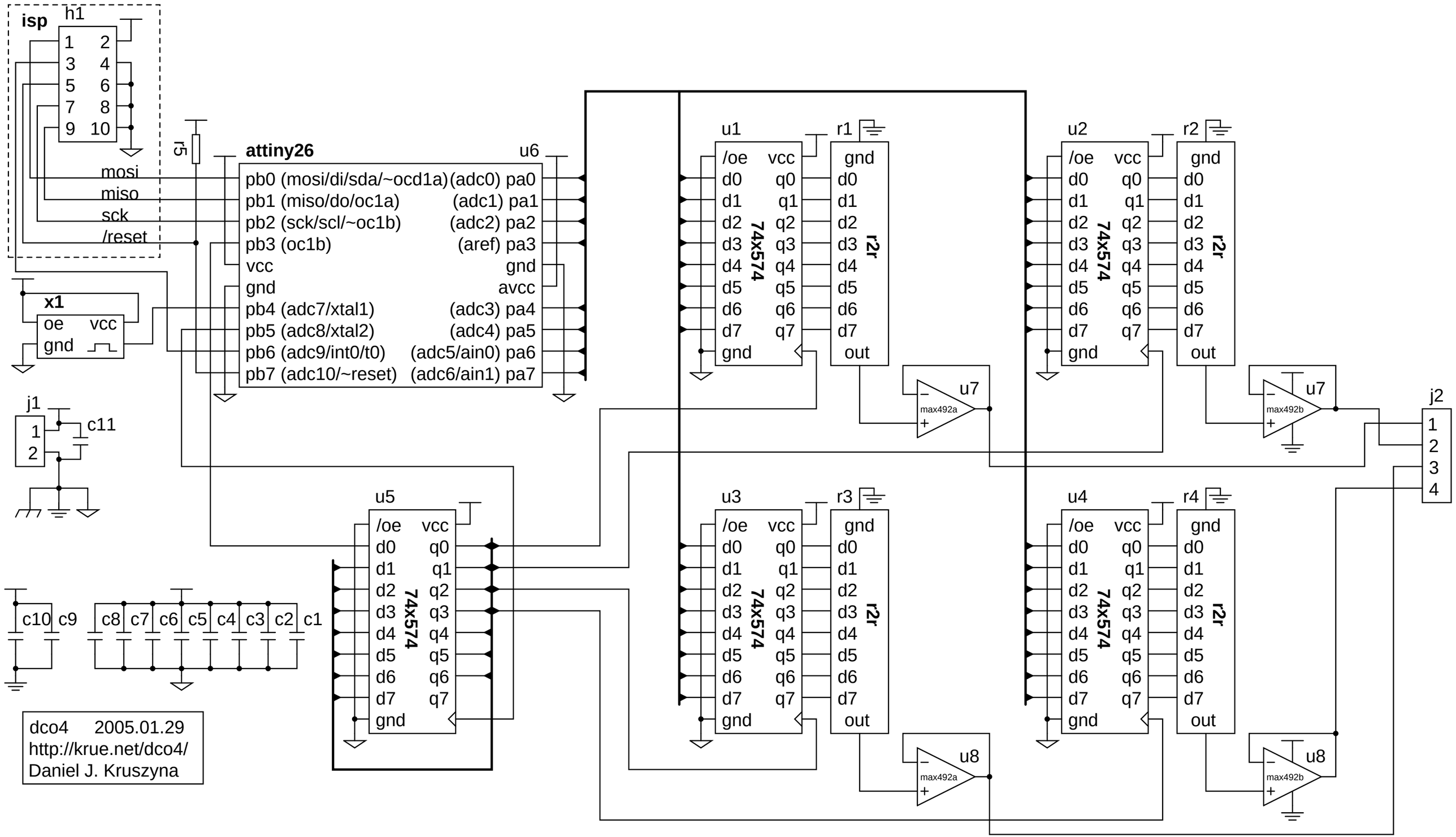
isp
h1
1 2
3 4
5 6
7 8
9 10
mosi
miso
sck
/reset
r5
attiny26
u6
pb0 (mosi/di/sda/~ocd1a) (adc0) pa0
pb1 (miso/do/oc1a) (adc1) pa1
pb2 (sck/scl/~oc1b) (adc2) pa2
pb3 (oc1b) (aref) pa3
vcc gnd
gnd avcc
pb4 (adc7/xtal1) (adc3) pa4
pb5 (adc8/xtal2) (adc4) pa5
pb6 (adc9/int0/t0) (adc5/ain0) pa6
pb7 (adc10/~reset) (adc6/ain1) pa7
x1
oe vcc
gnd
j1
c11
u1
r1
u2
r2
u3
r3
u4
r4
u5
/oe vcc
d0 q0
d1 q1
d2 q2
d3 q3
d4 q4
d5 q5
d6 q6
d7 q7
gnd
74x574
gnd
out
r2r
u7
u8
max492a
max492b
j2
1
2
3
4
c10 c9 c8 c7 c6 c5 c4 c3 c2 c1
dco4 2005.01.29
http://krue.net/dco4/
Daniel J. Kruszyna