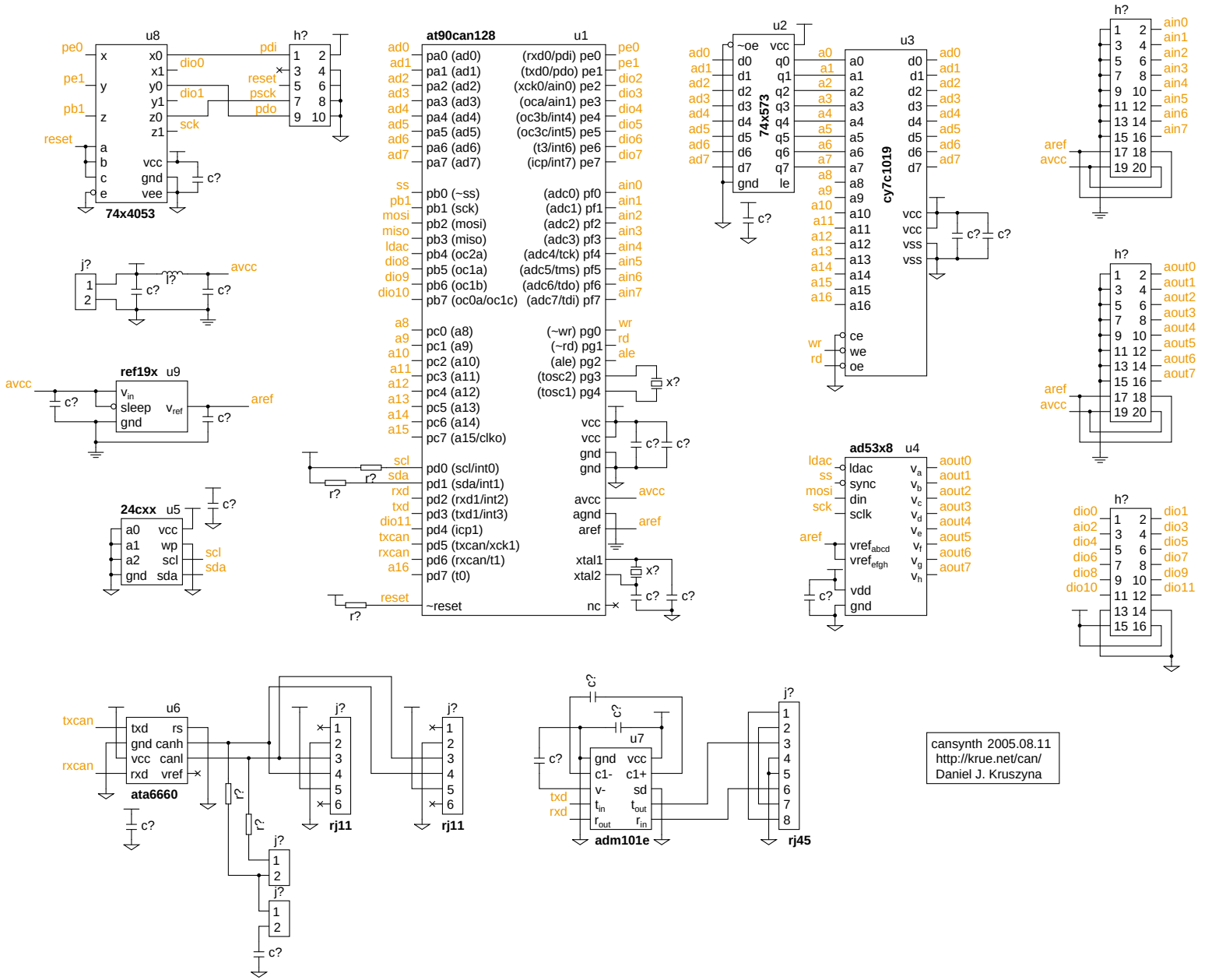
u8
74x4053
h?
at90can128
u1
u2
74x573
u3
cy7c1019
ref19x u9
24cxx u5
ad53x8 u4
u6
ata6660
rj11
rj11
u7
adm101e
rj45
cansynth 2005.08.11
http://krue.net/can/
Daniel J. Kruszyna